Click Here
For Your Free Quote

TRUNNION MOUNTED BALL VALVES

TM SERIES

Engineered Valves For Pipeline Service Application

- Valves for oil & gas pipelines and other industrial applications
- Flanged or Butt Weld
- ANSI Class 150 thru 2500
- API 6D - Compliance
- 2, 3 & 1PC Welded Body Designs
- 3 Way and 4 Way Multiport Designs
- Size Range: 2" thru 56"
- Piggable Option

TM Series valves can be serviced in line while under full line pressure.

Flo-Tite manufactures an extensive range of Trunnion Mounted Ball Valves for a wide range of specific applications. In addition to our standard trim stock series valves, Flo-Tite offers a multitude of options and modifications including metal seated and cryogenic application designs.

Please contact the factory for more information on how Flo-Tite can help you to meet your most demanding application requirements.

Engineered for Heavy Duty Applications, Including:

- Natural Gas Storage
- Gas Transmission
- Dryer Service
- LNG, HRSG Industries
- Measurement Skids
- Subsea, Oil Refinery
- Natural Gas Compressor Stations
- Desalination Industry
- Petrochemical Plants
- CO_2 Service
- Pipeline
- Power Generation

High-Tech Design Features

Flo-Tite Valves & Controls is an industry innovator specializing in ball valves of all types, sizes, and configurations. Flo-Tite is committed to excellence in engineering, manufacturing, and customer service.
Relentless innovation by design is the very definition of Flo-Tite Valves & Controls.

The Flo-Tite TM Series valves are trunnion mounted, metal or polymeric seated ball valves. They provide excellent sealing properties over an extensive range of temperatures and pressures. TM Series valves are available in both full and reduced bore designs with a wide range of materials, sizes, and pressure classes offered. With such a large selection of options available, the TM Series trunnion mounted ball valves are the ideal choice for a variety of applications.

These valves conform to the requirements of ANSI B16.34, API 6FA, API 607, and API 6D among others. They are manufactured to the highest of standards and under a quality plan that complies under the requirements of API Q1 and ISO 9001. The factory is licensed to use the API 6D monogram on all valves manufactured.

The vast range of sizes, styles, pressure classes, and materials together with conformance to ANSI, API, and NACE specifications make these valves suitable for virtually all industrial, petrochemical, refinery, and oil and gas services.

Design Benefits

TM Series ball valves are designed and manufactured with a number of features that benefit end users of all industries. These valves are offered in a wide array of body and trim materials for severe and critical conditions. Flo-Tite TM series ball valves are engineered for excellence and are different by design.

1. Double Block and Bleed

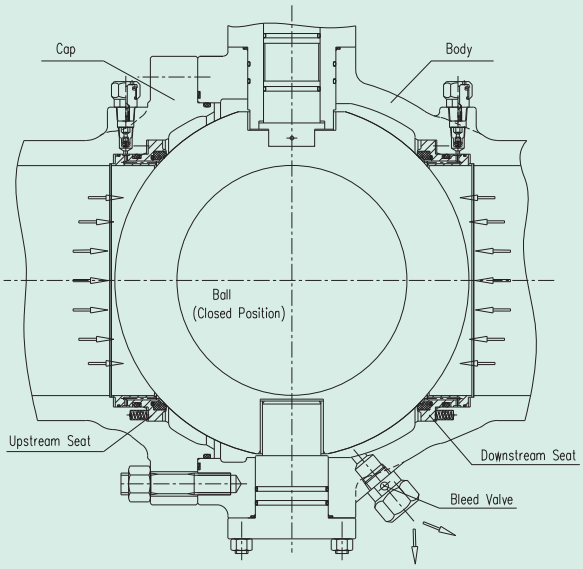

Seats are spring-loaded and seal individually on the upstream and downstream sides of the ball. Whether the valve is in the fully open or fully closed position. The body cavity can be isolated from the pipe line pressure, and the body cavity can then be bled down or drained through a drain plug.

2. Protected Seat Springs

Non-Spring Protection | Spring Protection

TM Series valves are built with a seat spring protection structure that prevents impurities from entering the spring hole. This unique feature protects the spring from any damage and adds to the life of the valve.

3. Bi-Directional Sealing

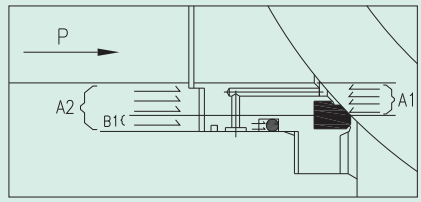

A2 > A1

The spring-loaded seats on the upstream and downstream allow the valve to be sealed in two directions. Therefore, the valve can be installed in any flow direction during installation.

4. Automatic Cavity Relief

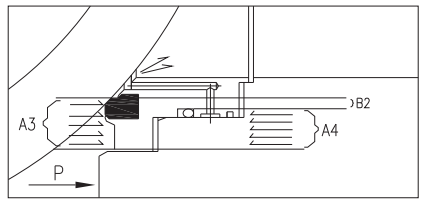

A3 > A4

5. Fire Safe Design

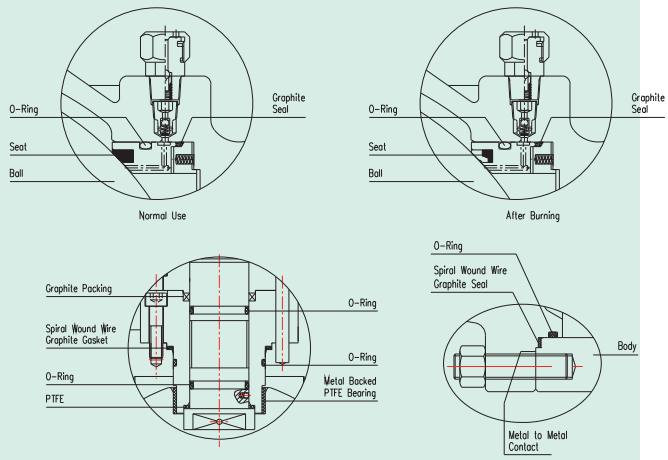

When the non-metallic seats are burned or diminished as in the case of a fire or unusually high temperatures, the seat retainer rings due to force from the springs, will make contact with the ball and form a metal-to metal seal which can minimize internal leakage. Fire safe stem packing and body gaskets prevent external leakage. The TM Series fire safe design conforms to API 6FA or API 607. Upon request, an API 607 certificate can be provided.

High-Tech Design Features

6. Various End Connections

TM series valves are available with various end connections. Flanged ends are commonly offered according to ANSI or DIN standards.

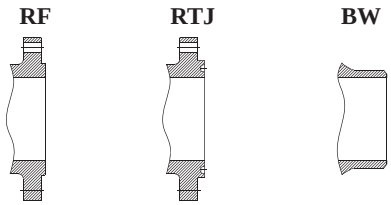

7. Secondary Emergency Sealing

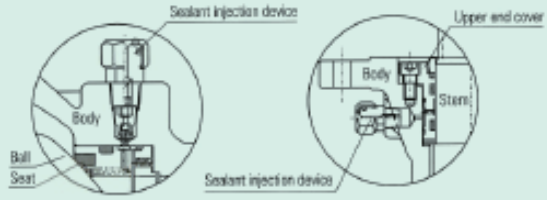

In the event of seat and stem seal damage, emergency injection fittings can be used to inject sealant providing the valves with a temporary backup seal.

8. Blow-out Proof Stem

The stem is designed with a step at its bottom ensuring that the media in the valve cavity cannot blow out the stem due to excessive pressure.

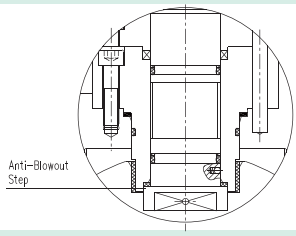

9. Anti-Static Device

In order to prevent friction between the ball and stem from causing a spark during operation of the valve, the TM Series valves are assembled with a static-conduction spring as standard ensuring electrical continuity between the ball, stem, and body. In this manner, static electricity is conducted to the ground and system safety is ensured.

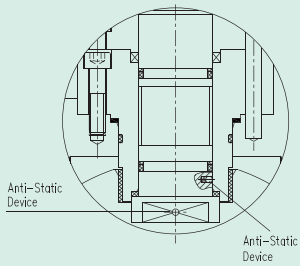

10. Metal-to-Metal Seating Technology

Flo-Tite TM Series valves can be supplied with metal seats. These valves are engineered for severe service conditions such as extreme temperatures or pressures as well as abrasive medias. Flo-Tite works closely with our customers to design valves tailored to their specific needs. Knowledge of applications, materials, and design criteria allows our engineers to find solutions quickly and effectively. Selecting the correct materials and plating surfaces are the keys to overcoming a wide variety of application problems. Hard Chrome Plating, Tungsten Carbide, and Stellite are some of the commonly used materials in Flo-Tite's metal-seated valves.

11. Bore Options

Full port, reduced or standard port options are available according to customer's requirements. TM Series full bore ball valves can be used in service lines that required periodic pigging.

12. Stem Extensions

According to installation or operation requirements, the valve stem may be extended upon request. This design is suitable for buried service or underground applications.
The stem extension length can be manufactured to meet customer requirements. Extended stems help provide protection of personnel in high temperature service applications as well as providing more ready operation in less accessible installations.

13. Valve Vent and Drain

TM Series valves are usually supplied with a vent valve located in the upper part of the body and a drain plug located in the lower part of the body. Smaller size valves may have a vent/drain valve located in the lower part of the body only.

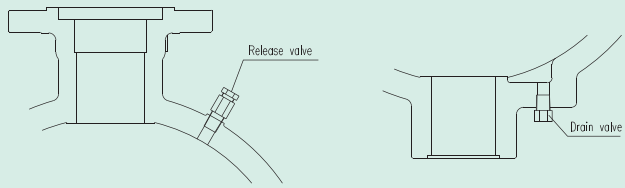

14. Flexible Operation

The standard stem bearings have integrated Teflon that is both low friction and self-lubricating to reduce valve operating torque. This allows for the valve to be operated for long periods without the need of injected lubrication grease.

15. Various Operators Available

The valve top works are designed according to ISO 5211, which is convenient for connection and exchange of various operators to be easily installed. The common operator are lever handle, wrench operated, worm gear operated, or pneumatic, electrical, or hydraulic automated assemblies.

16. Extensive Polymeric Seating Options

Flo-Tite TM Series ball valves are available with a wide range of soft seat and hybrid seal options. Flo-Tite's engineers work closely with our seal manufactures utilizing modern techniques to develop new unique seat and seal options for a variety of applications. Flo-Tite is an innovative industry leader in developing new sealing technologies.

17. NACE Compliance

TM Series ball valves are supplied as standard in materials that meet the requirements of NACE MR-01-75. Strict material control and inspection during the manufacturing process ensures compliance.

18. Multi-Port Designs 3 and 4 Way

The TM Series multiport trunnion ball valves offers savings in both cost and space over the use of multiple valves. It is offered in all available body and trim materials as well as soft seated and metal seated options.

Valve Torque and Cv Values

Flo-Tite Series TM Trunnion Mounted Ball Valves

Design Standards and Specifications

Products Conform To The Following Standards And Specifications

API 6D	American Petrolum Institute, Specification for Pipeline Valves
API Q1	American Petrolum Institute, Specification for Quality Programs
API 607	American Petrolum Institute, Fire Test for Soft Seated Valves
ANSI B16.5	American National Standard Institute, Steel Pipe Flanges and Flanged Fittings
ANSI B16.10	American National Standard Institute, Steel Pipe Flanges and Flanged Fittings
ANSI B31.1	American National Standard Institute, Power Piping
ANSI B31.3	American National Standard Institute, Process Piping
ANSI B16.34	American National Standard Institute, Steel valves - Flanged and Butt Weld End
FCI 70-2-1976	American National Standard Institute, Control Valve Seat Leakage
CE	Pressure Equipment Directive 97/23/EC
BS 6755 Part 2	British Standards Institute, Specifications for Fire-Type Testing Requirements
BS 2080	British Standards Institute, Specification for Face-to-Face Dimensions of Flanged and Buttweld Steel Valves
ISO 5752	International Standard Organization, Metal Valves for Use in Flanged Piping Systems
ISO 9001	International Standard Organization, Quality Systems
MSS-SP-6	Manufacturer's Standardization Society, Standard Finishes for Contact Faces of Pipe Flanged and Connecting-End Flanges of Valves and Fittings.
MSS-SP-25	Manufacturer's Standardization Society, Standard Marking System for Valves
MSS-SP-44	Manufacturer's Standardization Society, Steel Pipe line Flanges
MSS-SP-55	Manufacturer's Standardization Society, Quality Standard for Steel Castings for Valves
NACE MR-01-75	National Association of Corrosion Engineers - Sulfide Stress Cracking Resistant Metallic Materials for Oil Field Equipment.

Full Port Trunnion Ball Valve Cv and Valve Torque Chart

NPS	Torque, In-Lb						Cv					
	150#	300#	600#	900#	1500#	2500#	150#	300#	600#	900#	1500#	2500#
1.5″	266	531	664	841			308	308	308	165		
2″	372	708	1018	1328	4142	5213	500	420	350	320	320	285
3″	1239	1947	2956	3894	7169	13984	1390	1050	1000	910	820	725
4″	1947	3186	4071	7346	13276	35084	2550	2000	1850	1760	1610	1510
6″	3363	6019	8851	16639	33190	48679	5249	5186	4400	4300	4080	3590
8″	5664	10444	17702	31863	48679	104306	10750	10262	8450	8400	7980	7160
10″	10621	18764	31686	46732	66912	116830	17775	17220	14250	14160	13020	11580
12″	14648	22038	52131	65319	86737	130035	26750	25950	22790	21230	19610	17700
14″	24738	37306	57707	78108			32600	30900	28600	26600		
16″	33235	49918	76869	104262			44700	42600	39250	36600		
18″	45050	72930	122583	163296			58500	56450	52000	50540		
20″	56689	97535	163650	229765			76000	72700	70500	69700		
24″	108776	171616	273311	375006			113500	109450	99000	86750		
26″	133646	201532	311369	421207			128630	123050	114050	102940		
28″	151790	225606	345002	464399			151750	146050	136500	121200		
30″	164447	243042	370227	497412			179300	171700	158900	140093		
32″	175953	261540	399965	538480			199750	187700	175000	159420		
36″	203470	302448	462602	622748			258300	243050	226300	226033		

Reduced Port Trunnion Ball Valve Cv and Valve Torque Chart

NPS	Torque, In-Lb						Cv					
	150#	300#	600#	900#	1500#	2500#	150#	300#	600#	900#	1500#	2500#
2″x1.5″	266	531	664	841			140	140	135	125		
3″x2″	372	708	1018	1328	4142	5213	220	210	190	185	180	170
4″x3″	1239	1947	2956	3894	7169	13984	630	600	560	505	500	500
6″x4″	1947	3186	4071	7346	13276	35084	925	910	800	730	730	700
8″x6″	3363	6019	8851	16639	33190	48679	2500	2498	2150	2010	2005	2000
10″x8″	5664	10444	17702	31863	48679	104306	5000	4990	4500	4160	4150	3970
12″x10″	10621	18764	31686	46732	66912	116830	8400	8390	8000	7300	7280	6850
14″x12″	14648	22038	52131	65319	86737	130035	14080	14040	13990	13920		
16″x14″	24738	37306	57707	78108			14780	14750	14720	14690		
18″x16″	33235	49918	76869	104262			20840	20820	20750	20700		
20″x18″	45050	72930	122583	163296			28100	28000	27850	27840		
24″x20″	56689	97535	163650	229765			29000	28850	28750	26950		
36″x30″	164447	243042	370227	497412			123000	121550	118300	103080		

Torques shown in these tables are to be used as a guide for actuator selection. Additional requirements may be imposed by media characteristics, trim, and frequency of valve operation. A safety factor of 1.25 is recommended for actuator sizing.

These torques are based on the standard construction with RPTFE/Nylon/Delrin/Devlon seats for all sizes of class 150, 300 and sizes 2″ to 16″ of class 600, Devlon seats are used for sizes 18″ and larger class 600 and for all sizes of class 900, 1500 & 2500.

Technical Specifications

Pressure Temperature Rating

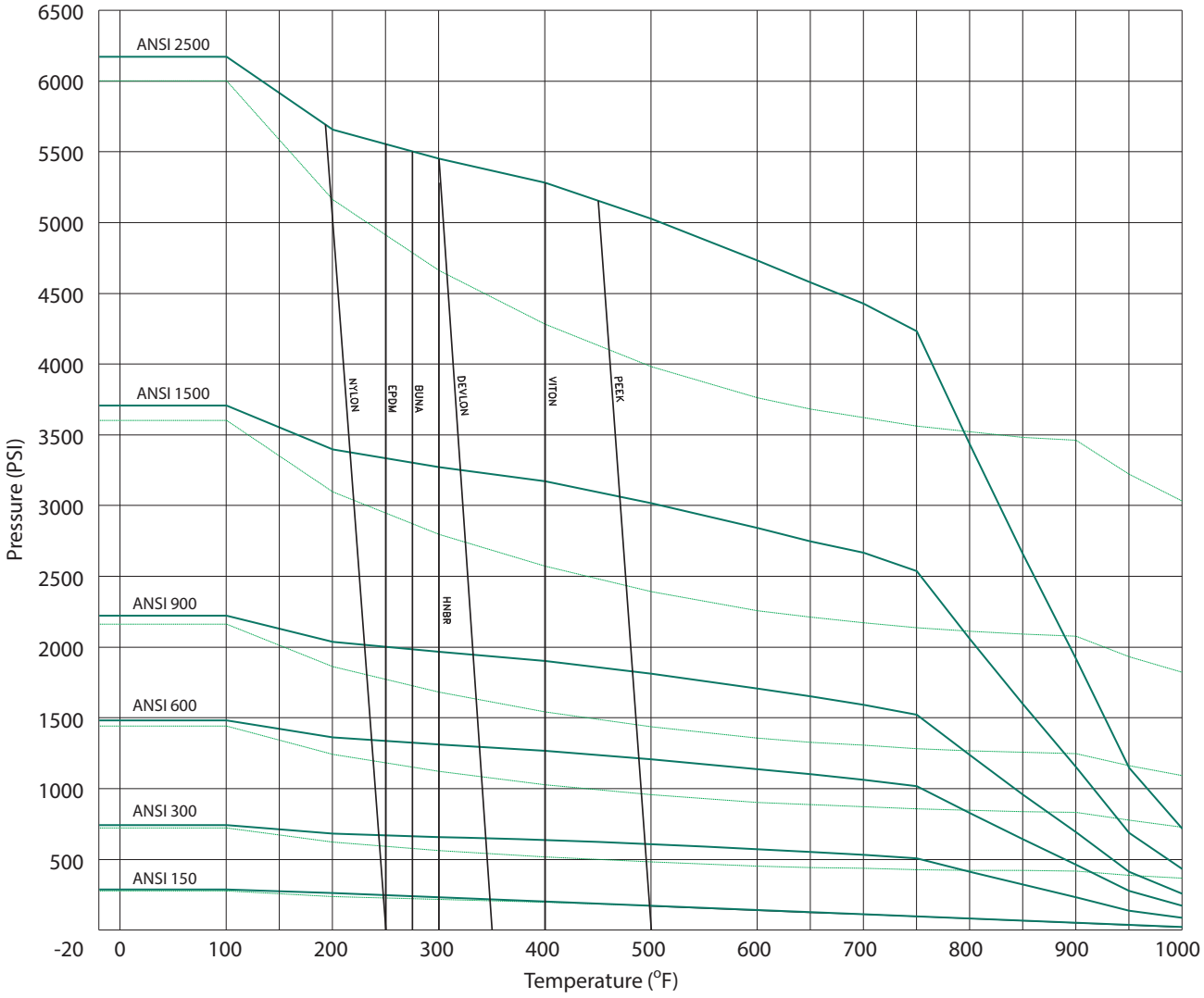

Valve Body Ratings

Maximum Working Pressure By Ansi Class (psi)

Temperature		Class 150		Class 300		Class 600		Class 900		Class 1500		Class 2500	
		WCB A105	CF8M A182	WCB A105	CF8M A182	WCB A105	CF8M A182	WCB A105	CF8M A182	WCB A105	CF8M A182	WCB A105	CF8M A182
°F	°C	LF2	F316	LF2	F316	LF2	F316	LF2	F316	LF2	F316	LF2	F316
100	38	285	275	740	720	1480	1440	2220	2160	3705	3600	6170	6000
200	93	260	235	680	620	1360	1240	2035	1860	3395	3095	5655	5160
300	149	230	215	655	560	1310	1120	1965	1680	3270	2795	5450	4660
400	204	200	195	635	515	1265	1025	1900	1540	3170	2570	5280	4280
500	260	170	170	605	480	1205	955	1810	1435	3015	2390	5025	3980
600	316	140	140	570	450	1135	900	1705	1355	2840	2255	4730	3760
650	343	125	125	550	440	1100	885	1650	1325	2745	2210	4575	3680
700	371	110	110	530	435	1060	870	1590	1305	2665	2170	4425	3620
750	399	95	95	505	425	1015	855	1520	1280	2535	2135	4230	3560
800	427	80	80	410	420	825	845	1235	1265	2055	2110	3430	3520

Forged Trunnion Ball Valve

Typical 3PC Design & Construction

3PC Easy Maintenance Design

Exploded View

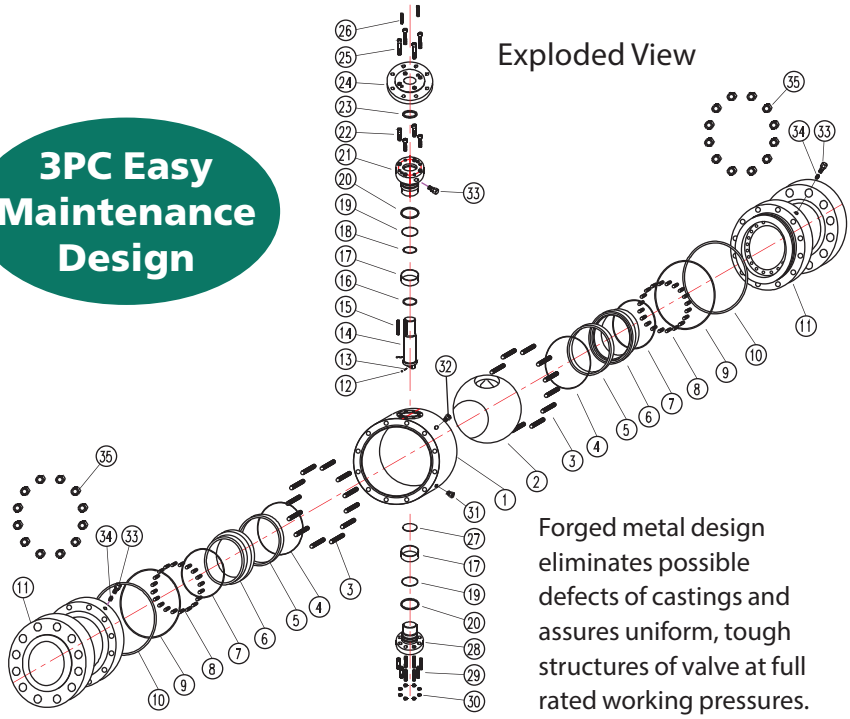

Forged metal design eliminates possible defects of castings and assures uniform, tough structures of valve at full rated working pressures.

Bill of Materials

No.	Part Name	Standard Options / Additional Materials Are Also Available / Consult Factory					
		Material A	Material B	Material C	Material D	Material E	Material F
1	Body	A105	A105	A105	F304	F316	LF2
2	Ball	A105 + ENP	F304	F316	F304	F316	LF2 + ENP
3	Stud	B7M	B7M	B7M	B8M	B8M	L7
4	Anti-Fire Gasket	Graphite	Graphite	Graphite	Graphite	Graphite	Graphite
5	Seat	PTFE or others	PTFE or others	PTFE or others	PTFE or others	PTFE or others	PTFE or others
6	Seat Retainer	A105 + ENP	F304	F316	F304	F316	LF2 + ENP
7	O-Ring	Viton	Viton	Viton	Viton	Viton	Viton
8	Spring	17-7PH / Inconel	17-7PH / Inconel	17-7PH / Inconel	17-7PH / Inconel	17-7PH / Inconel	17-7PH / Inconel
9	O-Ring	Viton	Viton	Viton	Viton Viton	Viton	Viton
10	Anti-Fire Gasket	304SS + Graphite	304SS + Graphite	304SS + Graphite	304SS + Graphite	304SS + Graphite	304SS + Graphite
11	End Cap	A105	A105	A105	F304	F316	LF2
12	Anti-Static Ball	Stainless Steel	Stainless Steel	Stainless Steel	Stainless Steel	Stainless Steel	Stainless Steel
13	Anti-Static Spring	Stainless Steel	Stainless Steel	Stainless Steel	Stainless Steel	Stainless Steel	Stainless Steel
14	Stem	A105 + ENP	F304	F316	F304	F316	LF2 + ENP
15	Key	ANSI 1045	ANSI 1045	ANSI 1045	ANSI 1045	ANSI	1045
16	Thrust Bearing	PTFE	PTFE	PTFE	PTFE	PTFE PTFE	PTFE
17	Stem Bearing	Metal + PTFE	Metal + PTFE	Metal + PTFE	Metal + PTFE	Metal + PTFE	Metal + PTFE
18	O-Ring	Viton	Viton	Viton	Viton	Viton	Viton
19	O-Ring	Viton	Viton	Viton	Viton	Viton	Viton
20	Anti-Fire Gasket	304SS + Graphite	304SS + Graphite	304SS + Graphite	304SS + Graphite	304SS + Graphite	304SS + Graphite
21	Gland	A105 + ENP	F304	F316	F304	F316 LF2 + ENP	LF2 + ENP
22	Hexagon Screw	2HM	2HM	2HM	8M	8M 7M	7M
23	Packing	Graphite / PTFE	Graphite / PTFE	Graphite / PTFE	Graphite / PTFE	Graphite / PTFE	Graphite / PTFE
24	Connection Plate	A105	A105	A105	F304	F316 LF2	LF2
25	Hexagon Screw	B7M	B7M	B7M	B8M	B8M L7	L7
26	Pin	ANSI 1035	ANSI 1035	ANSI 1035	ANSI 1035	ANSI 1035	ANSI 1035
27	Thrust Bearing	PTFE	PTFE	PTFE	PTFE	PTFE PTFE	PTFE
28	Lower Stem	A105 + ENP	F304	F316	F304	F316	LF2 + ENP
29	Stud	B7M	B7M	B7M	B8M	B8M L7	L7
30	Hexagon Nut	2HM	2HM	2HM	8M	8M 7M	7M
31	Drain Plug	Assembly	Assembly	Assembly	Assembly	Assembly	Assembly
32	Vent Valve	Assembly	Assembly	Assembly	Assembly	Assembly	Assembly
33	Sealant Fitting	Assembly	Assembly	Assembly	Assembly	Assembly	Assembly
34	Check Valve	Assembly	Assembly	Assembly	Assembly	Assembly	Assembly
35	Hexagon Nut	2HM	2HM	2HM	8M	8M	7M

Cast Trunnion Ball Valve

Typical 2PC Design & Construction

Exploded View

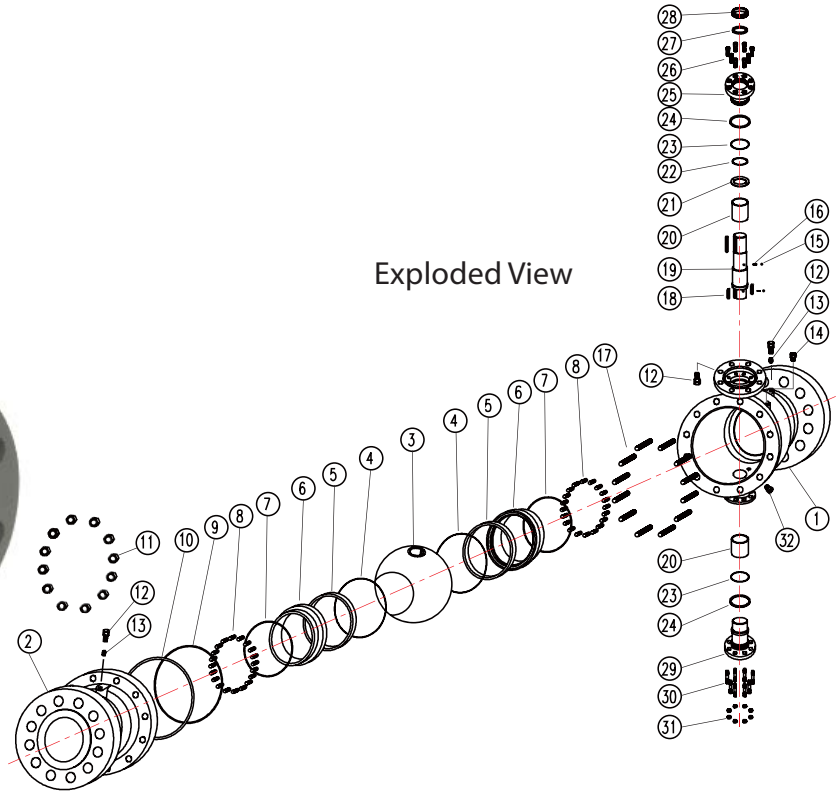

Bill of Materials

No.	Part Name	Standard Options / Additional Materials Are Also Available / Consult Factory					
		Material A	Material B	Material C	Material D	Material E	Material F
1	Body	WCB	WCB	WCB	CF8	CF8M	LCC
2	End Cap	WCB	WCB	WCB	CF8	CF8M	LCC
3	Ball	A105 + ENP	F304	F316	F304	F316	LF2 + ENP
4	Anti-Fire Packing	Graphite	Graphite	Graphite	Graphite	Graphite	Graphite
5	Seat	PTFE or others	PTFE or others	PTFE or others	PTFE or others	PTFE or others	PTFE or others
6	Seat Retainer	A105 + ENP	F304	F316	F304	F316	LF2 + ENP
7	O-Ring	Viton	Viton	Viton	Viton	Viton	Viton
8	Spring	17-7PH / Inconel	17-7PH / Inconel	17-7PH / Inconel	17-7PH / Inconel	17-7PH / Inconel	17-7PH / Inconel
9	O-Ring	Viton	Viton	Viton	Viton	Viton	Viton
10	Anti-Fire Gasket	304SS + Graphite	304SS + Graphite	304SS + Graphite	304SS + Graphite	304SS + Graphite	304SS + Graphite
11	Hexagon Nut	2HM	2HM	2HM	8M	8M	7M
12	Sealant Fitting	Assembly	Assembly	Assembly	Assembly	Assembly	Assembly
13	Check Valve	Assembly	Assembly	Assembly	Assembly	Assembly	Assembly
14	Vent Valve	Assembly	Assembly	Assembly	Assembly	Assembly	Assembly
15	Anti-Static Ball	Stainless Steel	Stainless Steel	Stainless Steel	Stainless Steel	Stainless Steel	Stainless Steel
16	Anti-Static Spring	Stainless Steel	Stainless Steel	Stainless Steel	Stainless Steel	Stainless Steel	Stainless Steel
17	Stud	B7M	B7M	B7M	B8M	B8M	L7
18	Key	ANSI 1045	ANSI 1045	ANSI 1045	ANSI 1045	ANSI 1045	ANSI 1045
19	Stem	A105 + ENP	F304	F316	F304	F316	LF2 + ENP
20	Stem Bearing	Metal + PTFE	Metal + PTFE	Metal + PTFE	Metal + PTFE	Metal + PTFE	Metal + PTFE
21	Thrust Bearing	PTFE	PTFE	PTFE	PTFE	PTFE	PTFE
22	O-Ring	Viton	Viton	Viton	Viton	Viton	Viton
23	O-Ring	Viton	Viton	Viton	Viton	Viton	Viton
24	Anti-Fire Gasket	304SS + Graphite	304SS + Graphite	304SS + Graphite	304SS + Graphite	304SS + Graphite	304SS + Graphite
25	Gland	A105 + ENP	F304	F316	F304	F316	LF2 + ENP
26	Socket Head Cap Screw	B7M	B7M	B7M	B8M	B8M	B8M
27	Packing	Graphite / PTFE	Graphite / PTFE	Graphite / PTFE	Graphite / PTFE	Graphite / PTFE	Graphite / PTFE
28	Packing Gland	A182 F6a	A182 F6a	A182 F6a	A182 F6a	A182 F6a	A182 F6a
29	Lower Cover	A105 + ENP	F304	F316	F304	F316	LF2 + ENP
30	Stud	B7M	B7M	B7M	B8M	B8M	L7
31	Hexagon Nut	2HM	2HM	2HM	8M	8M	7M
32	Drain Plug	Assembly	Assembly	Assembly	Assembly	Assembly	Assembly

Dimensions / Weights

TM Series Class 150, Class 300 Full Port

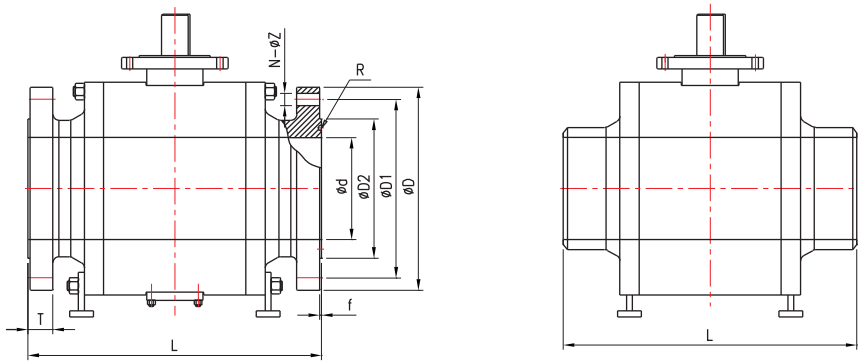

Dimensions included are for ANSI take-out long pattern for all 1, 2, 3PC valves.
Flo-Tite can also offers valves to meet the following standards: DIN, JIS, GB or others

Full Bore Body Design

R: standard RTJ groove number

Pressure Class	NPS	DN	d	L			D	D1	D2		f		R	T	N	Z	Weight Lbs RF, RTJ
				RF	RTJ	BW			RF	RTJ	RF	RTJ					
ANSI Class 150	2	50	1.97	7.00	7.50	8.50	6.00	4.75	3.62	4.00	0.06	0.25	R22	0.75	4	0.75	42
	3	80	2.95	8.00	8.50	11.12	7.50	6.00	5.00	5.25	0.06	0.25	R29	0.94	4	0.75	62
	4	100	3.94	9.00	9.50	12.00	9.00	7.50	6.19	6.75	0.06	0.25	R36	0.94	8	0.75	110
	6	150	5.91	15.50	16.00	18.00	11.00	9.50	8.50	8.62	0.06	0.25	R43	1.00	8	0.88	353
	8	200	7.91	18.00	18.50	20.50	13.50	11.75	10.62	10.75	0.06	0.25	R48	1.12	8	0.88	595
	10	250	9.92	21.00	21.50	22.00	16.00	14.25	12.75	13.00	0.06	0.25	R52	1.19	12	1.00	915
	12	300	11.93	24.00	24.50	25.00	19.00	17.00	15.00	16.00	0.06	0.25	R56	1.25	12	1.00	1455
	14	350	13.15	27.00	27.50	30.00	21.00	18.75	16.25	16.75	0.06	0.25	R59	1.38	12	1.12	1962
	16	400	15.16	30.00	30.50	33.00	23.50	21.25	18.50	19.00	0.06	0.25	R64	1.44	16	1.12	2381
	18	450	17.17	34.00	34.50	36.00	25.00	22.75	21.00	21.50	0.06	0.25	R68	1.56	16	1.25	3263
	20	500	19.17	36.00	36.50	39.00	27.50	25.00	23.00	23.50	0.06	0.25	R72	1.69	20	1.25	4343
	24	600	23.19	42.00	42.50	45.00	32.00	29.50	27.25	28.00	0.06	0.25	R76	1.88	20	1.38	6614
	26	650	24.92	45.00	C/F	53.00	34.25	31.75	29.50	C/F	0.06	C/F	C/F	2.69	24	1.38	7963
	28	700	26.93	49.00	C/F	55.00	36.50	34.00	31.50	C/F	0.06	C/F	C/F	2.81	28	1.38	9705
	30	750	28.94	51.00	C/F	60.00	38.75	36.00	33.75	C/F	0.06	C/F	C/F	2.94	28	1.38	11270
	32	800	30.67	54.00	C/F	68.00	41.75	38.50	36.00	C/F	0.06	C/F	C/F	3.19	28	1.63	14698
	36	900	34.41	60.00	C/F	C/F	46.00	42.75	40.25	C/F	0.06	C/F	C/F	3.56	32	1.63	19019
	40	1000	38.43	69.00	C/F	C/F	50.75	47.25	44.25	C/F	0.06	C/F	C/F	3.56	36	1.63	27145
	42	1050	40.16	73.00	C/F	C/F	53.00	49.50	47.00	C/F	0.06	C/F	C/F	3.81	36	1.63	30865
	48	1200	45.91	84.00	C/F	C/F	59.50	56.00	53.50	C/F	0.06	C/F	C/F	4.25	44	1.63	47333
	56	1400	53.54	98.00	C/F	C/F	68.75	65.00	62.00	C/F	0.06	C/F	C/F	4.88	48	1.88	73703
ANSI Class 300	2	50	1.97	8.50	9.12	8.50	6.50	5.00	3.62	4.25	0.06	0.312	R23	0.88	8	0.75	49
	3	80	2.95	11.12	11.74	11.12	8.25	6.62	5.00	5.75	0.06	0.312	R31	1.12	8	0.88	84
	4	100	3.94	12.00	12.62	12.00	10.00	7.88	6.19	6.88	0.06	0.312	R37	1.25	8	0.88	132
	6	150	5.91	15.88	16.50	18.00	12.50	10.62	8.50	9.50	0.06	0.312	R45	1.44	12	1.00	397
	8	200	7.91	19.75	20.37	20.50	15.00	13.00	10.62	11.88	0.06	0.312	R49	1.62	12	1.12	650
	10	250	9.92	22.38	23.00	22.00	17.50	15.25	12.75	14.00	0.06	0.312	R53	1.88	16	1.25	992
	12	300	11.93	25.50	26.12	25.00	20.50	17.75	15.00	16.25	0.06	0.312	R57	2.00	16	1.25	1543
	14	350	13.15	30.00	30.62	30.00	23.00	20.25	16.25	18.00	0.06	0.312	R61	2.12	20	1.38	2557
	16	400	15.16	33.00	33.62	33.00	25.50	22.50	18.50	20.00	0.06	0.312	R65	2.25	20	1.38	2954
	18	450	17.17	36.00	36.62	36.00	28.00	24.75	21.00	22.62	0.06	0.312	R69	2.38	24	1.38	3549
	20	500	19.17	39.00	39.75	39.00	30.50	27.00	23.00	25.00	0.06	0.375	R73	2.50	24	1.38	4850
	24	600	23.19	45.00	45.88	45.00	36.00	32.00	27.25	29.50	0.06	0.438	R77	2.75	24	1.62	7628
	26	650	24.92	49.00	C/F	53.00	38.25	34.50	29.50	C/F	0.06	C/F	C/F	3.13	28	1.75	8856
	28	700	26.93	53.00	C/F	55.00	40.75	37.00	31.50	C/F	0.06	C/F	C/F	3.38	28	1.75	10966
	30	750	28.94	55.00	C/F	60.00	43.00	39.25	33.75	C/F	0.06	C/F	C/F	3.63	28	1.88	12524
	32	800	30.67	60.00	C/F	68.00	45.25	41.50	36.00	C/F	0.06	C/F	C/F	3.88	28	2.00	15073
	36	900	34.41	68.00	C/F	C/F	50.00	46.00	40.25	C/F	0.06	C/F	C/F	4.13	32	2.13	19180
	40	1000	38.43	77.00	C/F	C/F	48.75	45.50	42.75	C/F	0.06	C/F	C/F	4.50	32	1.75	27115
	42	1050	40.16	82.00	C/F	C/F	50.75	47.50	44.75	C/F	0.06	C/F	C/F	4.69	32	1.75	31700
	48	1200	45.91	85.50	C/F	C/F	57.75	54.00	51.25	C/F	0.06	C/F	C/F	5.25	32	2.00	47360
	56	1400	53.54	108.00	C/F	C/F	67.25	63.00	59.75	C/F	0.06	C/F	C/F	6.06	28	2.38	75103

Note: All weights are estimated.

Dimensions / Weights

TM Series Class 150 & 300 Reduced Port

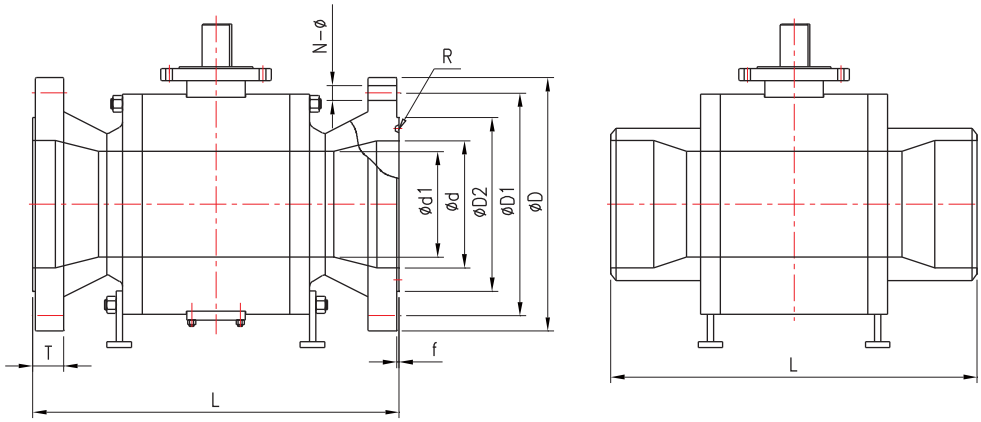

Dimensions included are for ANSI take-out long pattern for all 1, 2, 3PC valves.
Flo-Tite can also offers valves to meet the following standards: DIN, JIS, GB or others

Reduced Bore Body Design

R: standard RTJ groove number

Pressure Class	NPS	DN	d	d1	L			D	D1	D2		f		R	T	N	Z	Weight Lbs RF, RTJ
					RF	RTJ	BW			RF	RTJ	RF	RTJ					
ANSI Class 150	3″ x 2″	80	2.95	1.97	8.00	8.50	11.12	7.50	6.00	5.00	5.25	0.06	0.25	R29	0.94	4	0.75	62
	4″ x 3″	100	3.94	2.95	9.00	9.50	12.00	9.00	7.50	6.19	6.75	0.06	0.25	R36	0.94	8	0.75	110
	6″ x 4″	150	5.91	3.94	15.50	16.00	18.00	11.00	9.50	8.50	8.62	0.06	0.25	R43	1.00	8	0.75	353
	8″ x 6″	200	7.91	5.91	18.00	18.50	20.50	13.50	11.75	10.62	10.75	0.06	0.25	R48	1.12	8	0.88	595
	10″ x 8″	250	9.92	7.91	21.00	21.50	22.00	16.00	14.25	12.75	13.00	0.06	0.25	R52	1.19	12	0.88	915
	12″ x 10″	300	11.93	9.92	24.00	24.50	25.00	19.00	17.00	15.00	16.00	0.06	0.25	R56	1.25	12	1.00	1455
	14″ x 10″	350	13.15	11.93	27.00	27.50	30.00	21.00	18.75	16.25	16.75	0.06	0.25	R59	1.38	12	1.00	1962
	14″ x 12″	350	13.15	11.93	27.00	27.50	30.00	21.00	18.75	16.25	16.75	0.06	0.25	R59	1.38	12	1.12	1962
	16″ x 12″	400	15.16	13.15	30.00	30.50	33.00	23.50	21.25	18.50	19.00	0.06	0.25	R64	1.44	16	1.12	2381
	16″ x 14″	400	15.16	15.16	30.00	30.50	33.00	23.50	21.25	18.50	19.00	0.06	0.25	R64	1.44	16	1.12	2381
	18″ x 16″	450	17.17	15.16	34.00	34.50	36.00	25.00	22.75	21.00	21.50	0.06	0.25	R68	1.56	16	1.25	3263
	20″ x 16″	500	19.17	17.17	36.00	36.50	39.00	27.50	25.00	23.00	23.50	0.06	0.25	R72	1.69	20	1.25	4343
	20″ x 18″	500	19.17	19.17	36.00	36.50	39.00	27.50	25.00	23.00	23.50	0.06	0.25	R72	1.69	20	1.25	4343
	24″ x 20″	600	23.19	19.17	42.00	42.50	45.00	32.00	29.50	27.25	28.00	0.06	0.25	R76	1.88	20	1.38	6614
	30″ x 24″	750	28.94	23.19	51.00	C/F	55.00	38.75	36.00	33.75	C/F	0.06	C/F	C/F	2.94	28	1.38	11270
	36″ x 30″	900	34.41	28.94	60.00	C/F	68.00	46.00	42.75	40.25	C/F	0.06	C/F	C/F	3.56	32	1.63	19019
ANSI Class 300	3″ x 2″	80	2.95	1.97	11.12	11.74	11.12	8.25	6.62	5.00	5.75	0.06	0.312	R31	1.12	8	0.88	93
	4″ x 3″	100	3.94	2.95	12.00	12.62	12.00	10.00	7.88	6.19	6.88	0.06	0.312	R37	1.25	8	0.88	137
	6″ x 4″	150	5.91	3.94	15.88	16.50	18.00	12.50	10.62	8.50	9.50	0.06	0.312	R45	1.44	12	0.88	254
	8″ x 6″	200	7.91	5.91	19.75	20.37	20.50	15.00	13.00	10.62	11.88	0.06	0.312	R49	1.62	12	1.00	432
	10″ x 8″	250	9.92	7.91	22.38	23.00	22.00	17.50	15.25	12.75	14.00	0.06	0.312	R53	1.88	16	1.12	772
	12″ x 10″	300	11.93	9.92	25.50	26.12	25.00	20.50	17.75	15.00	16.25	0.06	0.312	R57	2.00	16	1.25	1217
	14″ x 10″	350	13.15	11.93	30.00	30.62	30.00	23.00	20.25	16.25	18.00	0.06	0.312	R61	2.12	20	1.25	1420
	14″ x 12″	350	13.15	11.93	30.00	30.62	30.00	23.00	20.25	16.25	18.00	0.06	0.312	R61	2.12	20	1.25	1720
	16″ x 12″	400	15.16	13.15	33.00	33.62	33.00	25.50	22.50	18.50	20.00	0.06	0.312	R65	2.25	20	1.38	2002
	16″ x 14″	400	15.16	15.16	33.00	36.62	33.00	25.50	22.50	18.50	20.00	0.06	0.312	R65	2.25	20	1.38	2436
	18″ x 16″	450	17.17	15.16	36.00	39.75	36.00	28.00	24.75	21.00	22.62	0.06	0.312	R69	2.38	24	1.38	3307
	20″ x 16″	500	19.17	17.17	39.00	39.75	39.00	30.50	27.00	23.00	25.00	0.06	0.375	R73	2.50	24	1.38	3527
	20″ x 18″	500	19.17	19.17	39.00	45.88	39.00	30.50	27.00	23.00	25.00	0.06	0.375	R73	2.50	24	1.38	4211
	24″ x 20″	600	23.19	19.17	45.00	C/F	45.00	36.00	32.00	27.25	29.50	0.06	0.438	R77	2.75	24	1.62	6482
	30″ x 24″	750	28.94	23.19	55.00	C/F	55.00	43.00	39.25	33.75	C/F	0.06	C/F	C/F	3.63	28	1.88	9766
	36″ x 30″	900	34.41	28.94	68.00	C/F	68.00	50.00	46.00	40.25	C/F	0.06	C/F	C/F	4.13	32	2.13	16579

Note: All weights are estimated.

Click Here
For Your Free Quote

Dimensions / Weights

TM Series Class 600 & 900 Full Port

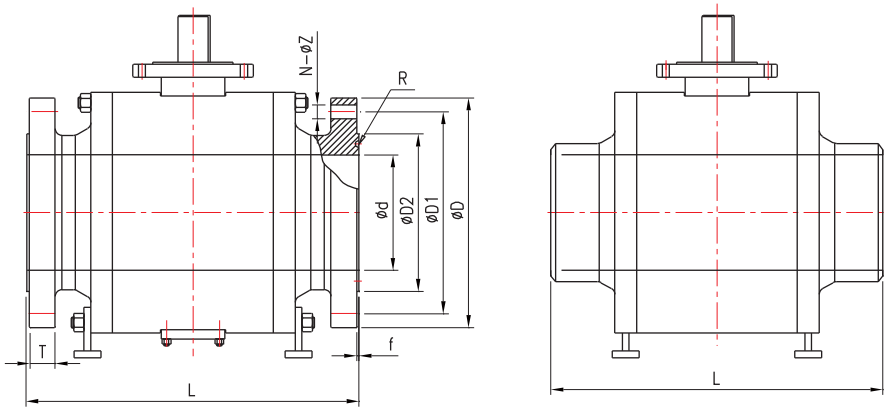

Dimensions included are for ANSI take-out long pattern for all 1, 2, 3PC valves.
Flo-Tite can also offers valves to meet the following standards: DIN, JIS, GB or others

Full Bore Body Design

R: standard RTJ groove number

Pressure Class	NPS	DN	d	L			D	D1	D2		f		R	T	N	Z	Weight Lbs RF, RTJ
				RF	RTJ	BW			RF	RTJ	RF	RTJ					
ANSI Class 600	2	50	1.97	11.50	11.62	11.50	6.50	5.00	3.62	4.25	0.25	0.312	R23	1.00	8	0.75	84
	3	80	2.95	14.00	14.12	14.00	8.25	6.62	5.00	5.75	0.25	0.312	R31	1.25	8	0.88	143
	4	100	3.94	16.00	17.12	16.00	10.75	8.50	6.19	6.88	0.25	0.312	R37	1.50	8	1.00	260
	6	150	5.91	19.50	22.12	19.50	14.00	11.50	8.50	9.50	0.25	0.312	R45	1.88	12	1.12	551
	8	200	7.91	23.50	26.12	23.50	16.50	13.75	10.62	11.88	0.25	0.312	R49	2.19	12	1.25	948
	10	250	9.92	26.50	31.12	26.50	20.00	17.00	12.75	14.00	0.25	0.312	R53	2.50	16	1.38	1499
	12	300	11.93	30.00	33.12	30.00	22.00	19.25	15.00	16.25	0.25	0.312	R57	2.62	20	1.38	2172
	14	350	13.15	32.50	35.12	32.50	23.75	20.75	16.25	18.00	0.25	0.312	R61	2.75	20	1.50	2837
	16	400	15.16	35.50	39.12	35.50	27.00	23.75	18.50	20.00	0.25	0.312	R65	3.00	20	1.62	3616
	18	450	17.17	38.50	43.12	38.50	29.25	25.75	21.00	22.62	0.25	0.312	R69	3.25	20	1.75	5000
	20	500	19.17	41.50	47.25	41.50	32.00	28.50	23.00	25.00	0.25	0.375	R73	3.50	24	1.75	6239
	24	600	23.19	48.50	55.38	48.50	37.00	33.00	27.25	29.50	0.25	0.438	R77	4.00	24	2.00	9700
	26	650	24.92	51.50	C/F	51.50	40.00	36.00	29.50	C/F	0.25	C/F	C/F	4.25	28	2.00	12026
	28	700	26.93	55.00	C/F	55.00	42.25	38.00	31.50	C/F	0.25	C/F	C/F	4.38	28	2.13	16777
	30	750	28.94	60.00	C/F	60.00	44.50	40.25	33.75	C/F	0.25	C/F	C/F	4.50	28	2.13	18563
	32	800	30.67	65.00	C/F	65.00	47.00	42.50	36.00	C/F	0.25	C/F	C/F	4.62	28	2.38	20349
	36	900	34.41	74.00	C/F	74.00	51.75	47.00	40.25	C/F	0.25	C/F	C/F	4.88	28	2.63	28660
ANSI Class 900	2	50	1.97	14.50	14.62	14.50	8.50	6.50	3.62	4.88	0.25	0.312	R24	1.50	8	1.00	126
	3	80	2.95	15.00	15.12	15.00	9.50	7.50	5.00	6.62	0.25	0.312	R31	1.50	8	1.00	192
	4	100	3.94	18.00	18.12	18.00	11.50	9.25	6.19	7.62	0.25	0.312	R37	1.75	8	1.25	425
	6	150	5.91	24.00	24.12	24.00	15.00	12.50	8.50	9.75	0.25	0.312	R45	2.19	12	1.25	750
	8	200	7.91	29.00	29.12	29.00	18.50	15.50	10.62	12.50	0.25	0.312	R49	2.50	12	1.50	1257
	10	250	9.92	33.00	33.12	33.00	21.50	18.50	12.75	14.62	0.25	0.312	R53	2.75	16	1.50	2011
	12	300	11.93	38.00	38.12	38.00	24.00	21.00	15.00	17.25	0.25	0.312	R57	3.12	20	1.50	2921
	14	350	12.68	40.50	40.88	40.50	25.25	22.00	16.25	19.25	0.25	0.438	R62	3.38	20	1.62	3571
	16	400	14.69	44.50	44.88	44.50	27.75	24.25	18.50	21.50	0.25	0.438	R66	3.50	20	1.75	4387
	18	450	16.65	48.00	48.50	48.00	31.00	27.00	21.00	24.12	0.25	0.500	R60	4.00	20	2.00	5756
	20	500	18.54	52.00	52.50	52.00	33.75	29.50	23.00	26.50	0.25	0.500	R74	4.25	20	2.12	8554
	24	600	22.44	61.00	61.75	61.00	41.00	35.50	27.25	31.25	0.25	0.625	R78	5.50	20	2.62	13880
	26	650	24.29	65.00	C/F	65.00	42.75	37.50	29.50	C/F	0.25	C/F	C/F	5.50	20	2.88	16050
	28	700	26.18	69.00	C/F	69.00	46.00	40.25	31.50	C/F	0.25	C/F	C/F	5.62	20	3.13	20208
	30	750	28.03	74.00	C/F	74.00	48.50	42.75	33.75	C/F	0.25	C/F	C/F	5.88	20	3.13	24861
	32	800	29.92	80.00	C/F	80.00	51.75	45.50	36.00	C/F	0.25	C/F	C/F	6.25	20	3.38	27117
	36	900	33.66	90.00	C/F	90.00	57.50	50.75	40.25	C/F	0.25	C/F	C/F	6.75	20	3.63	38581

Note: All weights are estimated.

Click Here
For Your Free Quote

Dimensions / Weights

TM Series Class 600 & 900 Reduced Port

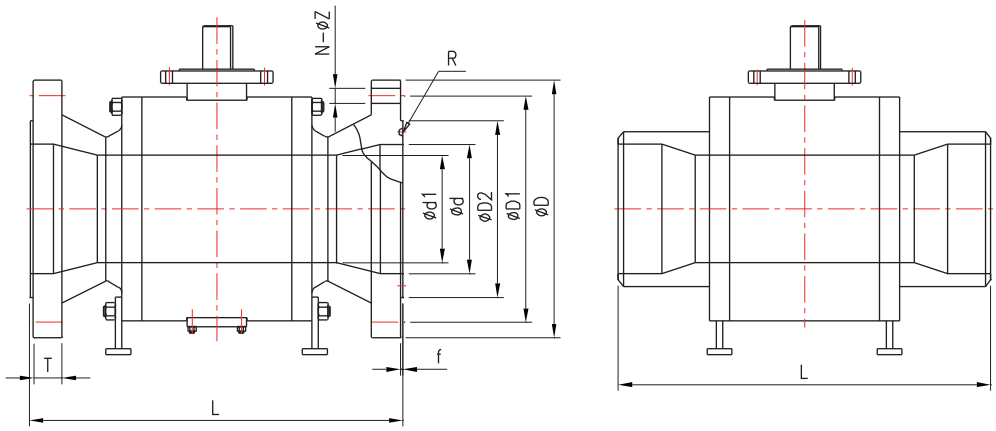

Dimensions included are for ANSI take-out long pattern for all 1, 2, 3PC valves.
Flo-Tite can also offers valves to meet the following standards: DIN, JIS, GB or others

Reduced Bore Body Design

R: standard RTJ groove number

Pressure Class	NPS	DN	d	d1	L			D	D1	D2		f		R	T	N	Z	Weight Lbs RF, RTJ
					RF	RTJ	BW			RF	RTJ	RF	RTJ					
ANSI Class 600	3″ x 2″	80	2.95	1.97	14.00	14.12	14.00	8.25	6.62	5.00	5.75	0.25	0.312	R31	1.25	8	0.88	97
	4″ x 3″	100	3.94	2.95	16.00	17.12	16.00	10.75	8.50	6.19	6.88	0.25	0.312	R37	1.50	8	1.00	187
	6″ x 4″	150	5.91	3.94	19.50	22.12	19.50	14.00	11.50	8.50	9.50	0.25	0.312	R45	1.88	12	1.12	373
	8″ x 6″	200	7.91	5.91	23.50	26.12	23.50	16.50	13.75	10.62	11.88	0.25	0.312	R49	2.19	12	1.25	617
	10″ x 8″	250	9.92	7.91	26.50	31.12	26.50	20.00	17.00	12.75	14.00	0.25	0.312	R53	2.50	16	1.38	1146
	12″ x 10″	300	11.93	9.92	30.00	33.12	30.00	22.00	19.25	15.00	16.25	0.25	0.312	R57	2.62	20	1.38	1742
	14″ x 10″	350	13.15	11.93	32.50	35.12	32.50	23.75	20.75	16.25	18.00	0.25	0.312	R61	2.75	20	1.50	2116
	14″ x 12″	350	13.15	11.93	32.50	35.12	32.50	23.75	20.75	16.25	18.00	0.25	0.312	R61	2.75	20	1.50	2359
	16″ x 12″	400	15.16	13.15	35.50	39.12	35.50	27.00	23.75	18.50	20.00	0.25	0.312	R65	3.00	20	1.62	2756
	16″ x 14″	400	15.16	15.16	35.50	39.12	35.50	27.00	23.75	18.50	20.00	0.25	0.312	R65	3.00	20	1.62	3014
	18″ x 16″	450	17.17	15.16	38.50	43.12	38.50	29.25	25.75	21.00	22.60	0.25	0.312	R69	3.25	20	1.75	4057
	20″ x 16″	500	19.17	17.17	41.50	47.25	41.50	32.00	28.50	23.00	25.00	0.25	0.375	R73	3.50	24	1.75	4799
	20″ x 18″	500	19.17	19.17	41.50	47.25	41.50	32.00	28.50	23.00	25.00	0.25	0.375	R73	3.50	24	1.75	5269
	24″ x 20″	600	23.19	19.17	48.50	55.38	48.50	37.00	33.00	27.25	29.50	0.25	0.438	R77	4.00	24	2.00	7848
	30″ x 24″	750	28.94	23.19	60.00	C/F	60.00	44.50	40.25	33.75	C/F	0.25	C/F	C/F	4.50	28	2.13	11464
	36″ x 30″	900	34.41	28.94	74.00	C/F	74.00	51.75	47.00	40.25	C/F	0.25	C/F	C/F	4.88	28	2.63	21826
ANSI Class 900	3″ x 2″	80	2.95	1.97	15.00	15.12	15.00	9.50	7.50	5.00	6.12	0.25	0.312	R31	1.50	8	1.00	123
	4″ x 3″	100	3.94	2.95	18.00	18.12	18.00	11.50	9.25	6.19	7.12	0.25	0.312	R37	1.75	8	1.25	214
	6″ x 4″	150	5.91	3.94	24.00	24.12	24.00	15.00	12.50	8.50	9.50	0.25	0.312	R45	2.19	12	1.25	485
	8″ x 6″	200	7.91	5.91	29.00	29.12	29.00	18.50	15.50	10.62	12.12	0.25	0.312	R49	2.50	12	1.50	961
	10″ x 8″	250	9.92	7.91	33.00	22.12	33.00	21.50	18.50	12.75	14.25	0.25	0.312	R53	2.75	16	1.50	1433
	12″ x 10″	300	11.93	9.92	38.00	38.12	38.00	24.00	21.00	15.00	16.50	0.25	0.312	R57	3.12	20	1.50	2315
	14″ x 10″	350	12.68	9.92	40.50	40.88	40.50	25.25	22.00	16.25	18.38	0.25	0.438	R62	3.38	20	1.62	2712
	14″ x 12″	350	12.68	11.93	40.50	40.88	40.50	25.25	22.00	16.25	18.38	0.25	0.438	R62	3.38	20	1.62	3164
	16″ x 12″	400	14.69	11.93	44.50	44.88	44.50	27.75	24.25	18.50	20.62	0.25	0.438	R66	3.50	20	1.75	3748
	16″ x 14″	400	14.69	12.68	44.50	44.88	44.50	27.75	24.25	18.50	20.62	0.25	0.438	R66	3.50	20	1.75	4012
	18″ x 16″	450	16.65	14.69	48.00	48.50	48.00	31.00	27.00	21.00	23.38	0.25	0.500	R70	4.00	20	2.00	5622
	20″ x 16″	500	18.54	14.69	52.00	52.50	52.00	33.75	29.50	23.00	25.50	0.25	0.500	R74	4.25	20	2.12	5798
	20″ x 18″	500	18.54	16.65	52.00	52.50	52.00	33.75	29.50	23.00	25.50	0.25	0.500	R74	4.25	20	2.12	8003
	24″ x 20″	600	22.44	18.54	61.00	61.75	61.00	41.00	35.50	27.25	30.38	0.25	0.625	R78	5.50	20	2.62	11809
	30″ x 24″	750	28.03	22.44	74.00	C/F	74.00	48.50	42.75	33.75	C/F	0.25	C/F	C/F	5.88	20	3.13	19246
	36″ x 30″	900	33.66	28.03	90.00	C/F	90.00	57.50	50.75	40.25	C/F	0.25	C/F	C/F	6.75	20	3.63	33918

Note: All weights are estimated.

Click Here
For Your Free Quote

Dimensions / Weights

TM Series Class 1500 & 2500 Full Port

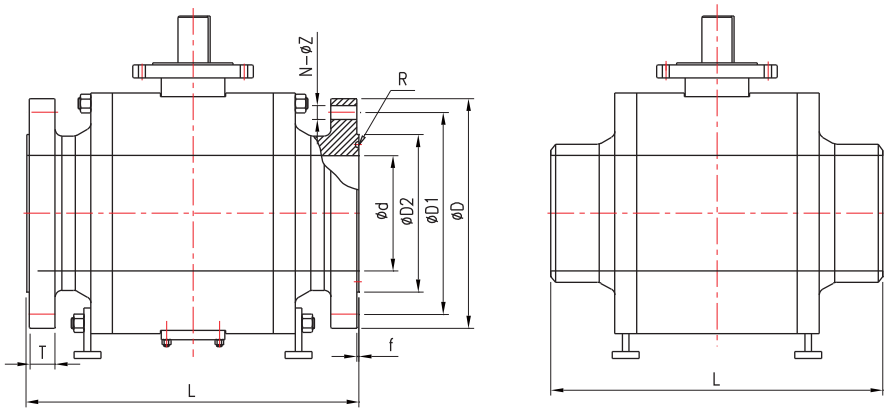

Dimensions included are for ANSI take-out long pattern for all 1, 2, 3PC valves.
Flo-Tite can also offers valves to meet the following standards: DIN, JIS, GB or others

Full Bore Body Design

R: standard RTJ groove number

Pressure Class	NPS	DN	d	L			D	D1	D2		f		R	T	N	Z	Weight Lbs RF, RTJ
				RF	RTJ	BW			RF	RTJ	RF	RTJ					
ANSI Class 1500	2	50	1.97	14.50	14.62	14.50	8.50	6.50	3.62	4.88	0.25	0.312	R24	1.50	8	1.00	126
	3	80	2.95	18.50	18.62	18.50	10.50	8.00	5.00	6.62	0.25	0.312	R35	1.88	8	1.25	370
	4	100	3.94	21.50	21.62	21.50	12.25	9.50	6.19	7.62	0.25	0.312	R39	2.12	8	1.38	507
	6	150	5.67	27.75	28.00	27.75	15.50	12.50	8.50	9.75	0.25	0.375	R46	3.25	12	1.50	1510
	8	200	7.56	32.75	33.13	32.75	19.00	15.50	10.62	12.50	0.25	0.438	R50	3.62	12	1.75	2189
	10	250	9.41	39.00	39.38	39.00	23.00	19.00	12.75	14.62	0.25	0.438	R54	4.25	12	2.00	3926
	12	300	11.30	44.50	45.12	44.50	26.50	22.50	15.00	17.25	0.25	0.562	R58	4.88	16	2.12	5027
	14	350	12.40	49.50	50.25	49.50	29.50	25.00	16.25	19.25	0.25	0.625	R63	5.25	16	2.38	6614
	16	400	14.17	54.50	55.38	54.50	32.50	27.75	18.50	21.50	0.25	0.688	R67	5.75	16	2.62	8413
	18	450	15.98	60.50	61.38	C/F	36.00	30.50	21.00	24.12	0.25	0.688	R71	6.38	16	2.88	13658
	20	500	17.87	65.50	66.38	C/F	38.75	32.75	23.00	26.50	0.25	0.688	R75	7.00	16	3.12	20007
ANSI Class 2500	2	50	1.65	17.75	17.87	17.75	9.25	6.75	3.62	5.25	0.25	0.312	R26	2.00	8	1.12	309
	3	80	2.44	22.75	23.00	22.75	12.00	9.00	5.00	6.62	0.25	0.375	R32	2.62	8	1.38	476
	4	100	3.43	26.50	26.88	26.50	14.00	10.75	6.19	8.00	0.25	0.438	R38	3.00	8	1.62	723
	6	150	5.16	36.00	36.50	36.00	19.00	14.50	8.50	11.00	0.25	0.500	R47	4.25	8	2.12	2271
	8	200	7.05	40.25	40.87	40.25	21.75	17.25	10.62	13.38	0.25	0.562	R51	5.00	12	2.12	3461
	10	250	8.78	50.00	50.88	50.00	26.50	21.25	12.75	16.75	0.25	0.688	R55	6.50	12	2.62	5622
	12	300	10.43	56.00	56.88	56.00	30.00	24.38	15.00	19.50	0.25	0.688	R60	7.25	12	2.88	8536

Note: All weights are estimated.

Flo-Tite Rebuild Kits

Complete soft goods repair kits are available for prompt delivery. The parts can be easily identified by the model number located on the valve tag. We can also offer replacement balls and stems by request.

Our Mission

Flo-Tite Valves and Controls is committed to delivering the highest quality of products that meet or exceed all industry standards with on-time deliveries at an excellent price.

Click Here
For Your Free Quote

Dimensions / Weights

TM Series Class 1500 & 2500 Reduced Port

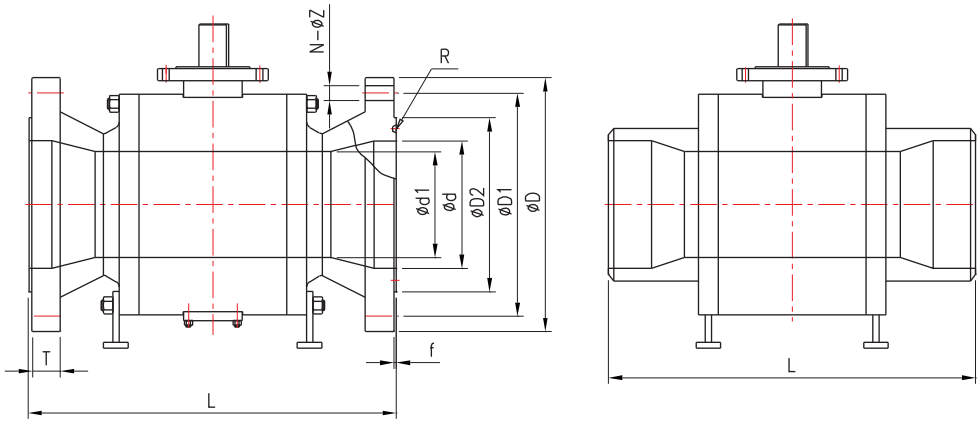

Dimensions included are for ANSI take-out long pattern for all 1, 2, 3PC valves.
Flo-Tite can also offers valves to meet the following standards: DIN, JIS, GB or others

Reduced Bore Body Design

R: standard RTJ groove number

Pressure Class	NPS	DN	d	d1	L			D	D1	D2		f		R	T	N	Z	Weight Lbs RF, RTJ
					RF	RTJ	BW			RF	RTJ	RF	RTJ					
ANSI Class 1500	3″x2″	80	2.95	1.97	18.50	18.62	18.50	10.50	8.00	5.00	6.62	0.25	0.312	R35	1.88	8	1.25	265
	4″x3″	100	3.94	2.91	21.50	21.65	21.50	12.25	9.50	6.19	7.62	0.25	0.312	R39	2.12	8	1.38	430
	6″x4″	150	5.67	3.94	27.75	28.00	27.75	15.50	12.50	8.50	9.75	0.25	0.375	R46	3.25	12	1.50	595
	8″x6″	200	7.56	5.67	32.75	33.13	32.75	19.00	15.50	10.62	12.50	0.25	0.438	R50	3.62	12	1.75	1292
	10″x8″	250	9.41	7.56	39.00	39.38	39.00	23.00	19.00	12.75	14.62	0.25	0.438	R54	4.25	12	2.00	2227
	12″x10″	300	11.30	9.41	44.50	45.12	44.50	26.50	22.50	15.00	17.25	0.25	0.562	R58	4.88	16	2.12	3880
	14″x10″	350	12.40	9.41	49.50	50.25	49.50	29.50	25.00	16.25	19.25	0.25	0.625	R63	5.25	16	2.38	4431
	14″x12″	350	12.40	11.30	49.50	50.25	49.50	29.50	25.00	16.25	19.25	0.25	0.625	R63	5.25	16	2.38	5908
	16″x12″	400	14.17	11.30	54.50	55.38	54.50	32.50	27.75	18.50	21.50	0.25	0.688	R67	5.75	16	2.62	6305
	16″x14″	400	14.17	12.40	54.50	55.38	54.50	32.50	27.75	18.50	21.50	0.25	0.688	R67	5.75	16	2.62	7782
	18″x16″	450	15.98	14.17	60.50	61.38	C/F	36.00	30.50	21.00	24.12	0.25	0.688	R71	6.38	16	2.88	11089
	20″x16″	500	17.87	14.17	65.50	66.38	C/F	38.75	32.75	23.00	26.50	0.25	0.688	R75	7.00	16	3.12	11464
	20″x18″	500	17.87	15.98	65.50	66.38	C/F	38.75	32.75	23.00	26.50	0.25	0.688	R75	7.00	16	3.12	11861
ANSI Class 2500	3″x2″	80	2.44	1.65	22.75	23.00	22.75	12.00	9.00	5.00	6.62	0.25	0.375	R32	2.62	8	1.38	346
	4″x3″	100	3.43	2.44	26.50	26.88	26.50	14.00	10.75	6.19	8.00	0.25	0.438	R38	3.00	8	1.62	573
	6″x4″	150	5.16	3.43	36.00	36.50	36.00	19.00	14.50	8.50	11.00	0.25	0.500	R47	4.25	8	2.12	1208
	8″x6″	200	7.05	5.16	40.25	40.87	40.25	21.75	17.25	10.62	13.38	0.25	0.562	R51	5.00	12	2.12	2425
	10″x8″	250	8.78	7.05	50.00	50.88	50.00	26.50	21.25	12.75	16.75	0.25	0.688	R55	6.50	12	2.62	4167
	12″x10″	300	10.43	8.78	56.00	56.88	56.00	30.00	24.38	15.00	19.50	0.25	0.688	R60	7.25	12	2.88	6283

Note: All weights are estimated.

Typical Flo-Tite Trunnion Ball Valve Nameplate

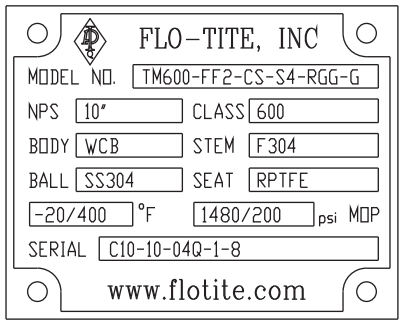

Cryogenic Service Ball Valves

Flo-Tite has a Cryogenic Service trunnion mounted ball valve for temperatures below -50F. We utilize different seat and packing materials including Kel-F. These valves come with extended bonnet/stem assemblies as per industry standards.

The valve pictured on the left is a 10″ Class 600 Trunnion used for a -300F Cryo service application.

Multiport Trunnion Ball Valve

Typical Design & Construction

Exploded View

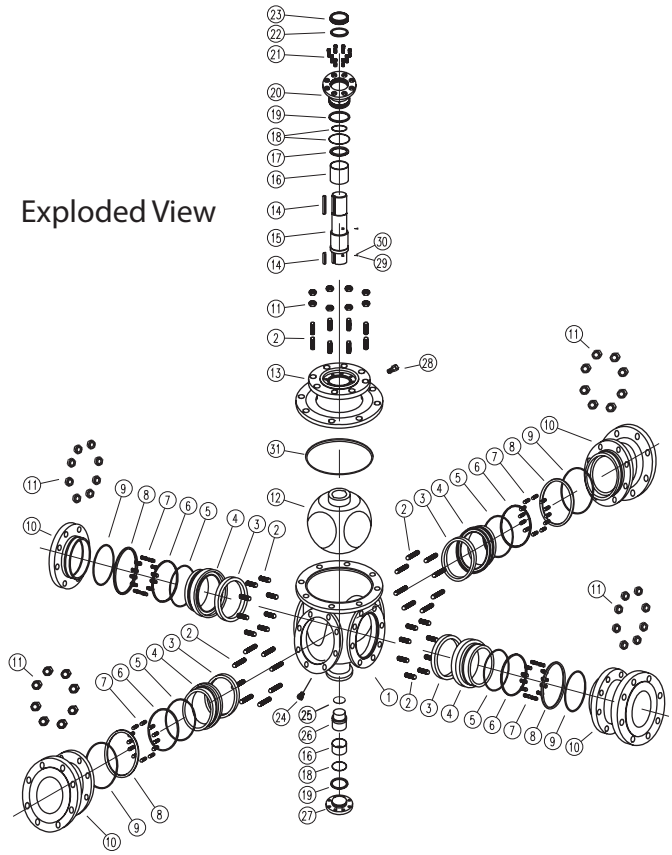

Bill of Materials

No.	Part Name	Standard Options / Additional Materials Are Also Available / Consult Factory					
		Material H	Material I	Material J	Material K	Material L	Material M
1	Body	WCB	WCB	WCB	CF8	CF8M	LCC
2	Stud	B7M	B7M	B7M	B8M	B8M	L7
3	Seat	PTFE or others	PTFE or others	PTFE or others	PTFE or others	PTFE or others	PTFE or others
4	Seat Retainer	A105+ENP	F304	F316	F304	F316	LF2+ENP
5	O-Ring	Viton	Viton	Viton	Viton	Viton	Viton
6	Anti-Fire Washer	Graphite	Graphite	Graphite	Graphite	Graphite	Graphite
7	Spring	17-7PH/ Inconel	17-7PH/ Inconel	17-7PH/ Inconel	17-7PH/ Inconel	17-7PH/ Inconel	17-7PH/ Inconel
8	Anti-Fire Gasket	304SS+Graphite	304SS+Graphite	304SS+Graphite	304SS+Graphite	304SS+Graphite	304SS+Graphite
9	O-Ring	Viton	Viton	Viton	Viton	Viton	Viton
10	End Cap	WCB	WCB	WCB	CF8	CF8M	LCC
11	Hexagon Nut	2HM	2HM	2HM	8M	8M	7M
12	Ball	A105+ENP	F304	F316	F304	F304	LF2+ENP
13	Bonnet	WCB	WCB	WCB	CF8	CF8M	LCC
14	Key	ANSI 1045	ANSI 1045	ANSI 1045	ANSI 1045	ANSI 1045	ANSI 1045
15	Stem	A105+ENP	F304	F316	F304	F316	LF2+ENP
16	Stem Bearing	Metal+PTFE	Metal+PTFE	Metal+PTFE	Metal+PTFE	Metal+PTFE	Metal+PTFE
17	Thrust Bearing	PTFE	PTFE	PTFE	PTFE	PTFE	PTFE
18	O-Ring	Viton	Viton	Viton	Viton	Viton	Viton
19	Anti-Fire Gasket	304SS+Graphite	304SS+Graphite	304SS+Graphite	304SS+Graphite	304SS+Graphite	304SS+Graphite
20	Gland	A105+ENP	F304	F316	F304	F316	LF2+ENP
21	Hexagon Screw	B7M	B7M	B7M	B8M	B8M	L7
22	Packing	Graphite/PTFE	Graphite/PTFE	Graphite/PTFE	Graphite/PTFE	Graphite/PTFE	Graphite/PTFE
23	Packing Gland	A182F6a	A182F6a	A182F6a	A182F6a	A182F6a	A182F6a
24	Drain Plug	Assembly	Assembly	Assembly	Assembly	Assembly	Assembly
25	Thrust Bearing	PTFE	PTFE	PTFE	PTFE	PTFE	PTFE
26	Lower Stem	A105+ENP	F304	F316	F304	F316	LF2+ENP
27	Lower Cover	A105+ENP	F304	F316	F304	F316	LF2+ENP
28	Sealant Fitting	Assembly	Assembly	Assembly	Assembly	Assembly	Assembly
29	Anti-Static Ball	Stainless Steel	Stainless Steel	Stainless Steel	Stainless Steel	Stainless Steel	Stainless Steel
30	Anti-Static Spring	Stainless Steel	Stainless Steel	Stainless Steel	Stainless Steel	Stainless Steel	Stainless Steel
31	Anti-Fire Gasket	304SS+Graphite	304SS+Graphite	304SS+Graphite	304SS+Graphite	304SS+Graphite	304SS+Graphite

Dimensions / Weights

TM Multiport Series Series Class 150 & Class 300 Full Port Design

Model Numbers
TM-MPF15 Class 150
TM-MPF30 Class 300

4 Way

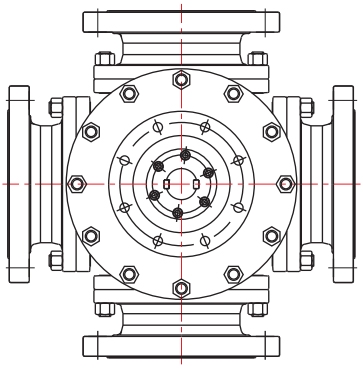

3 Way

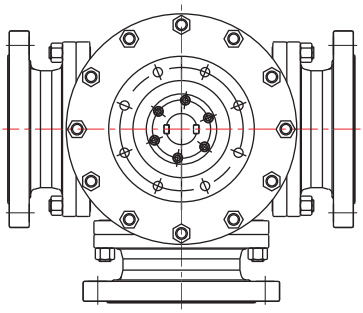

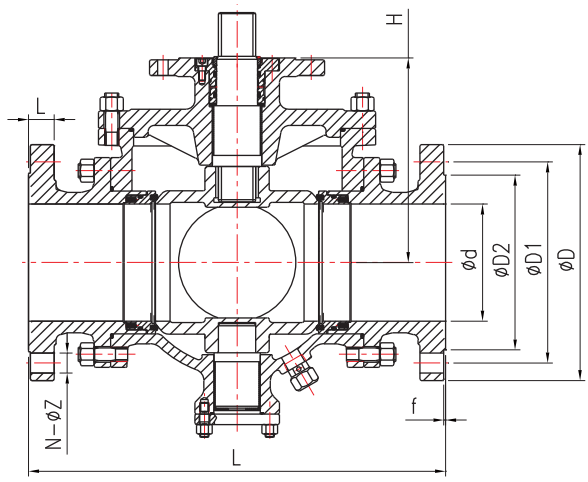

Typical Flow Plans

3 Way T Port 90°

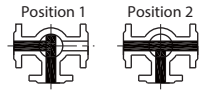

Flow Plan D

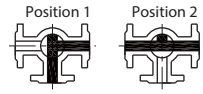

Flow Plan F

3 Way L Port 90°

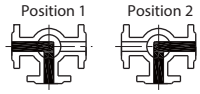

Flow Plan A

4 Way LL Port 90°

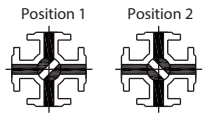

Flow Plan M

180° Turn & Other Flow Plan Available, Consult Fcatory or Tech Bulletin Page 93-11

Full Bore Body Design

Pressure Class	NPS	DN	d	L	D	D1	D2	f	T	N	Z	H	Weight Lbs
ANSI Class 150	2	50	1.97	10.24	6.00	4.75	3.62	0.06	0.75	4	0.75	8.07	C/F
	3	80	2.95	12.60	7.50	6.00	5.00	0.06	0.94	4	0.75	9.65	C/F
	4	100	3.94	14.57	9.00	7.50	6.19	0.06	0.94	8	0.75	12.01	C/F
	6	150	5.91	20.08	11.75	9.50	8.50	0.06	1.00	8	0.88	13.39	C/F
	8	200	7.91	22.83	14.25	11.75	10.62	0.06	1.12	8	0.88	16.73	C/F
	10	250	9.92	26.38	17.00	14.25	12.75	0.06	1.19	12	1.00	17.72	C/F
	12	300	11.93	29.92	18.75	17.00	15.00	0.06	1.25	12	1.00	20.87	C/F
	14	350	13.15	33.46	21.25	18.75	16.25	0.06	1.38	12	1.12	24.80	C/F
	16	400	15.16	38.58	22.75	21.25	18.50	0.06	1.44	16	1.12	26.77	C/F
	18	450	17.17	42.52	25.00	22.75	21.00	0.06	1.56	16	1.25	24.61	C/F
	20	500	19.17	48.03	27.50	25.00	23.00	0.06	1.69	20	1.25	26.38	C/F
	24	600	23.19	53.54	32.00	29.50	27.25	0.06	1.88	20	1.38	27.76	C/F
ANSI Class 300	2	50	1.97	10.24	6.50	5.00	3.62	0.06	0.88	8	0.75	8.07	C/F
	3	80	2.95	12.60	8.25	6.62	5.00	0.06	1.12	8	0.88	9.65	C/F
	4	100	3.94	14.57	10.00	7.88	6.19	0.06	1.25	8	0.88	12.01	C/F
	6	150	5.91	20.08	12.50	10.62	8.50	0.06	1.44	12	0.88	13.39	C/F
	8	200	7.91	22.83	15.00	13.00	10.62	0.06	1.62	12	1.00	16.73	C/F
	10	250	9.92	26.38	17.50	15.25	12.75	0.06	1.88	16	1.12	17.72	C/F
	12	300	11.93	29.92	20.50	17.75	15.00	0.06	2.00	16	1.25	20.87	C/F
	14	350	13.15	33.46	23.00	20.25	16.25	0.06	2.12	20	1.25	24.80	C/F
	16	400	15.16	38.58	25.50	22.50	18.50	0.06	2.25	20	1.38	26.77	C/F
	18	450	17.17	42.52	28.00	24.75	21.00	0.06	2.38	24	1.38	24.61	C/F
	20	500	19.17	48.03	30.50	27.00	23.00	0.06	2.50	24	1.38	26.38	C/F
	24	600	23.19	53.54	36.00	32.00	27.25	0.06	2.75	24	1.62	27.76	C/F

Note: ANSI Class 600 are also available on request. Consult factory.

TM Series Valves Are Available For Most Piggable Applications

Flo-Tite TM Series valves are offered as standard with an adjustable packing gland in size 2" - 12". This feature eliminates the need for removal of automation equipment when stem packing requires a field adjustment.

Flo-Tite offers a complete package of pneumatic, hydraulic & electric actuators. All types of controls & accessories for a vast number of special automated applications are available.

TM Series - Product Identification Code / Model Numbers

Model	Pressure Class	End Connection		Bore Port		Body Design		Body Material		Ball / Seat Retainer Material		Stem Material		Seat Material		Stem Seal Material		Body Seal Material		Valve Operator	
TM FTM	150	Flanged	F	Full	F	1 PC	1	316SS CF8M	SS	316SS CF8M	SS	SS316	SS	RPTFE	R	RPTFE	R	RPTFE	R	Lever	M
	300	RTJ	J	Reduce	R	2 PC	2	304SS CF8	S4	304SS CF8	S4	17-4PH	S7	Nylon	N	PTFE	T	PTFE	P	Locking Lever	L
	600	Butt Weld	B			3 PC	3	WCB A216	CS	WCB A216 / ENP	CS	A182 F6	F6	PTFE	T	UHMWPE	U	UHMWPE	U	Oval Handle	O
	900	Socket Weld	S					A105 Steel	FS	A105 / ENP	FS	410 SS	41	UHMWPE	U	Viton	V	Viton	V	Gear	G
	1500							LF2 A350	LF	LF2 A350 / ENP	LF	AISI 4140	A4	PEEK	P	Graphite	G	Graphite	G	Actuator	A
	2500							LCB A352	LC	LCB A352	LC	A182 F51	51	Devlon	V					Bare Stem	N
								Consult Factory for Optional Materials						Metal	M						

Ordering Example by Part Numbers

TM Series	ANSI 600	Flanged	Reduced Port	2 PC	Carbon Steel Body	SS304 Ball & Retainer	SS316 Stem	Devlon Seat	Graphite Packing	Graphite Body Seal	Bare Stem
Model	Pressure Class	End Connection	Bore Port	Body Design	Body Material	Ball / Seat Retainer Material	Stem Material	Seat Material	Stem Seal Material	Body Seal Material	Valve Operator
TM	600	F	R	2	CS	S4	SS	V	G	G	N

Selection, Installation, Operation and Maintenance

Although Flo-Tite can, and often does, provide general guidelines, it is obviously not possible to provide application specific data and warnings for all conceivable applications. The purchaser/end user must therefore assume the ultimate responsibility for the proper selection, installation, operation and maintenance of the products. Before installing, operating or repairing any valve, the purchasers/end user should train its employees and/or contractors in the safe use of the Flo-Tite products in connection with the purchaser's manufacturing processes.